US 20170057658A1

(19) **United States**

(12) **Patent Application Publication** (10) **Pub. No.: US 2017/0057658 A1**

Sabnis et al. (43) **Pub. Date: Mar. 2, 2017**

(54) **METHOD AND SYSTEM FOR IMPROVING SITUATIONAL AWARENESS OF UNANTICIPATED YAW ON A ROTORCRAFT SYSTEM**

(71) Applicant: **HONEYWELL INTERNATIONAL INC.**, Morristown, NJ (US)

(72) Inventors: **Rohini Sabnis**, Bangalore (IN); **Sriram P R**, Chennai (IN); **Mohammed Ibrahim Mohideen**, Bangalore (IN); **Sreekiran Wukkalam Srinivas**, Hyderabad (IN)

(73) Assignee: **HONEYWELL INTERNATIONAL INC.**, Morristown, NJ (US)

(21) Appl. No.: **14/833,641**

(22) Filed: **Aug. 24, 2015**

Publication Classification

(51) **Int. Cl.**

B64D 45/00	(2006.01)
B64C 27/82	(2006.01)
G08G 5/00	(2006.01)

(52) **U.S. Cl.**

CPC ***B64D 45/00*** (2013.01); ***G08G 5/0047*** (2013.01); ***B64C 27/82*** (2013.01)

(57) **ABSTRACT**

A method and system for alerting a pilot to a potential unanticipated LTE with simple intuitive symbology on the cockpit display is provided. The provided method and system evaluates rotorcraft airspeed, wind velocity, wind direction, and rotorcraft height above ground to predict several scenarios for LTE zones. The provided method and system overlays or superimposes simple intuitive symbology on the existing PFD and/or MFD to alert a pilot to a potential LTE.

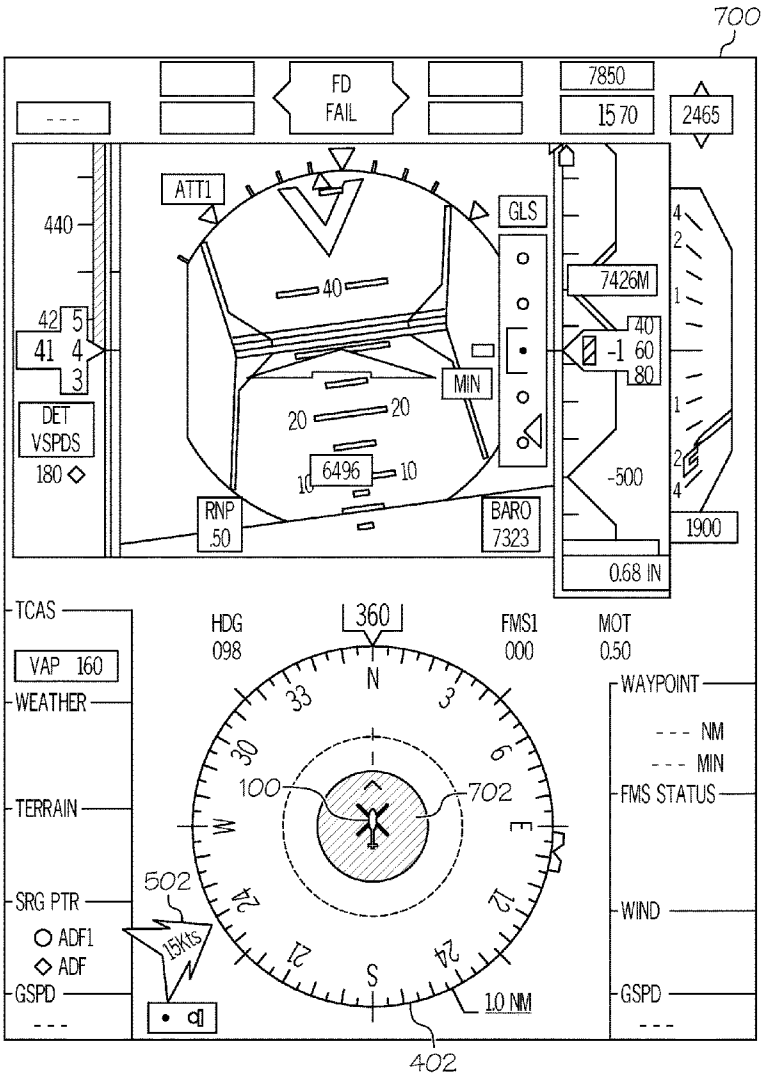

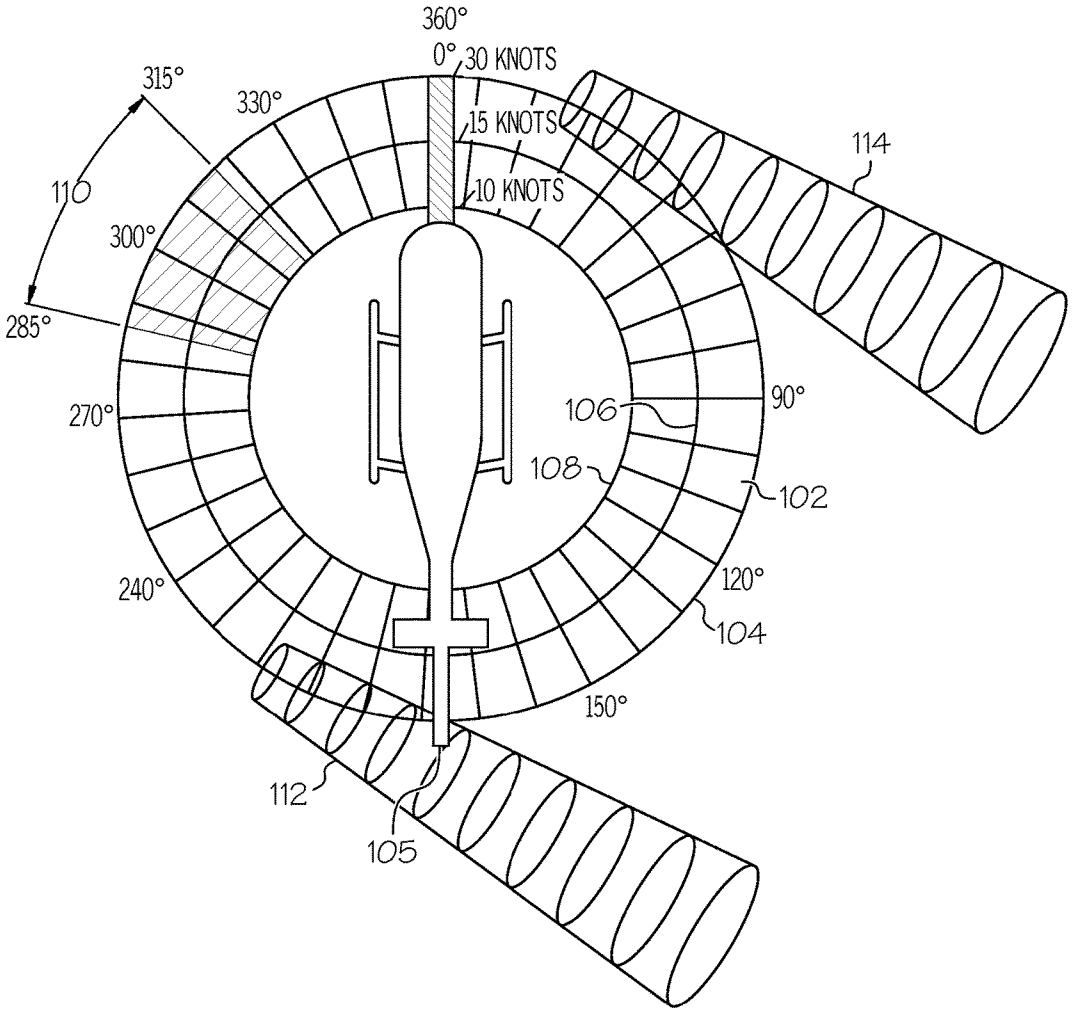
360°
0°
30 KNOTS
15 KNOTS
10 KNOTS
315°
330°
110
300°
285°
270°
240°
114
106
90°
108
102
120°
104
150°
112
105

FIG. 1

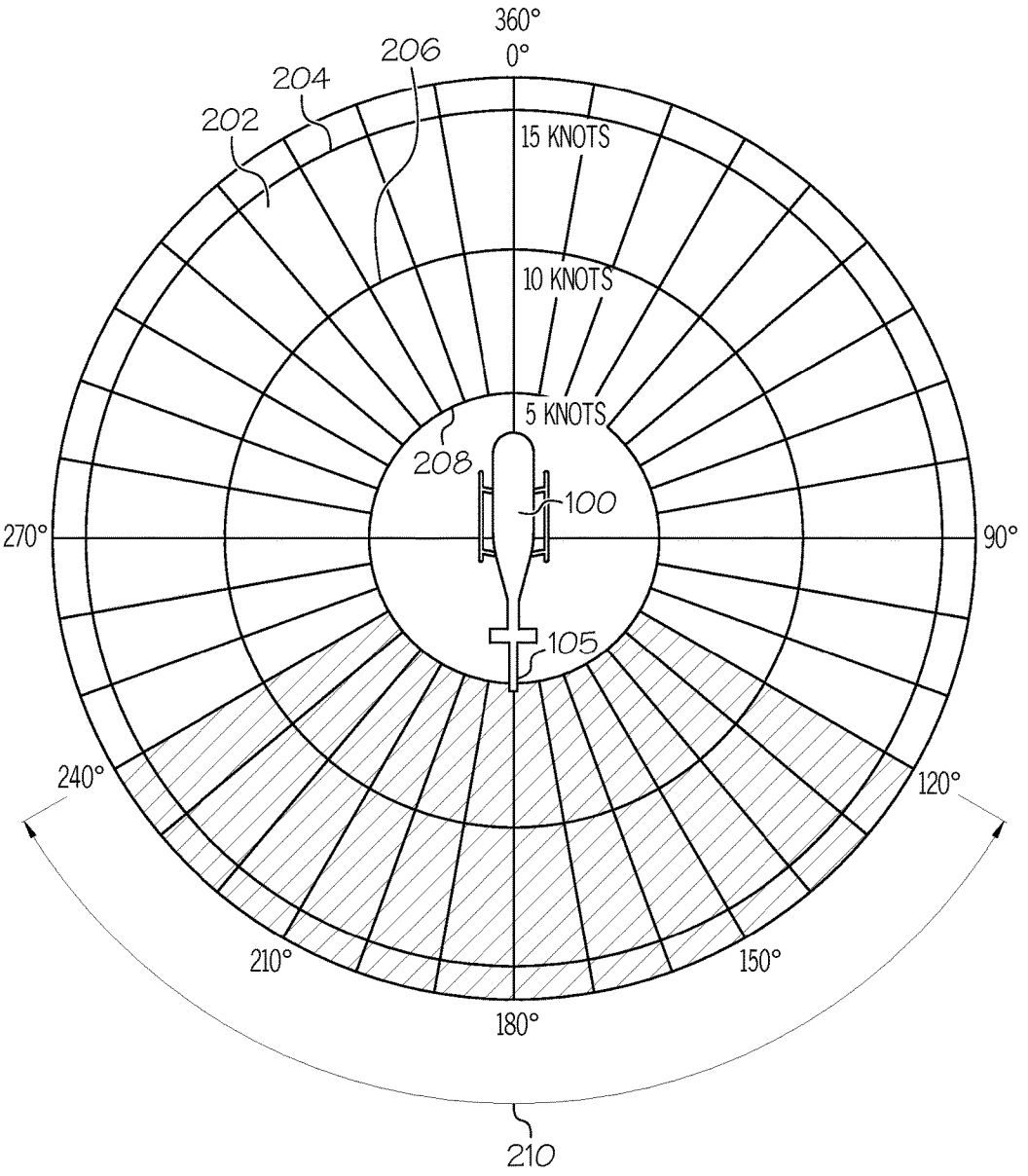
360°
0°
206
204
202
15 KNOTS
10 KNOTS
5 KNOTS
208
100
270°
90°
105
240°
120°
210°
150°
180°
210

FIG. 2

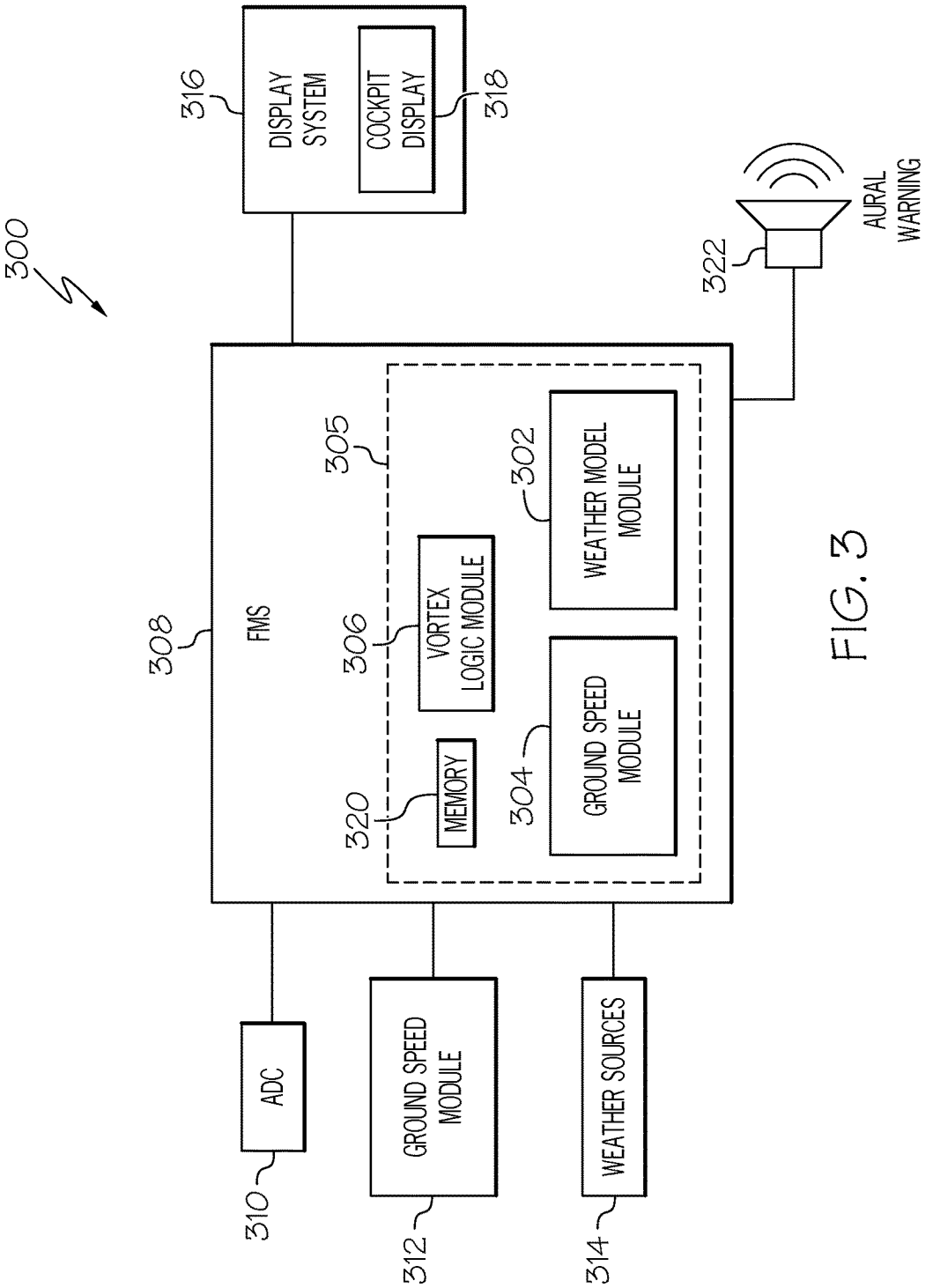
300
316
DISPLAY SYSTEM
COCKPIT DISPLAY
318
322
AURAL WARNING
308
FMS
305
302
WEATHER MODEL MODULE
306
VORTEX LOGIC MODULE
320
MEMORY
304
GROUND SPEED MODULE
ADC
310
GROUND SPEED MODULE
312
WEATHER SOURCES
314

FIG. 3

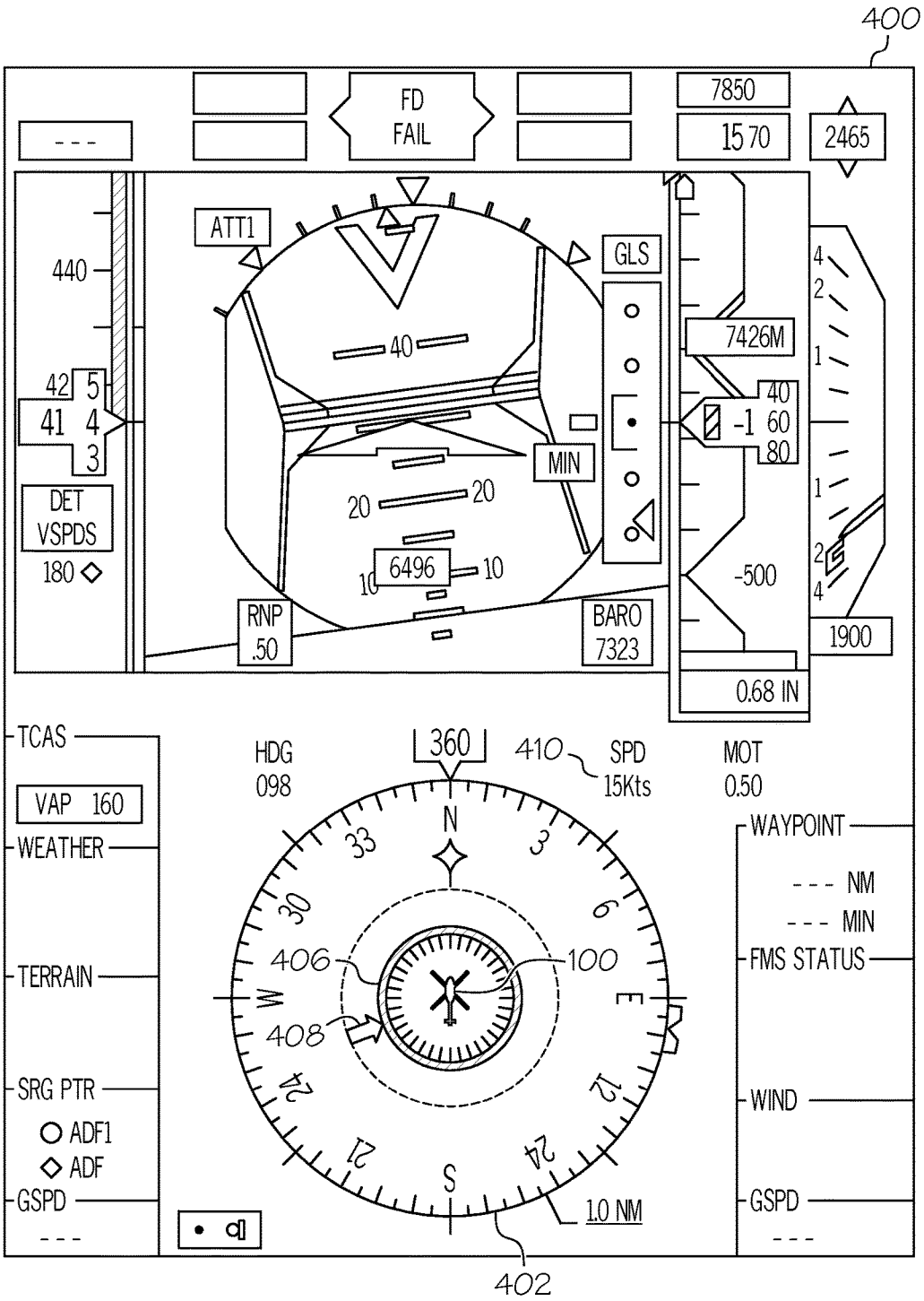
400
FD
FAIL
7850
1570
2465
ATT1
GLS
440
40
7426M
42
5
41
4
3
40
-1
60
80
MIN
DET
VSPDS
180
20
20
6496
10
10
-500
RNP
.50
BARO
7323
1900
0.68 IN
TCAS
VAP 160
WEATHER
TERRAIN
SRG PTR
ADF1
ADF
GSPD
HDG
098
360
410
SPD
15Kts
MOT
0.50
N
33
3
30
6
406
100
W
E
408
24
12
21
24
S
1.0 NM
402
WAYPOINT
NM
MIN
FMS STATUS
WIND
GSPD

FIG. 4

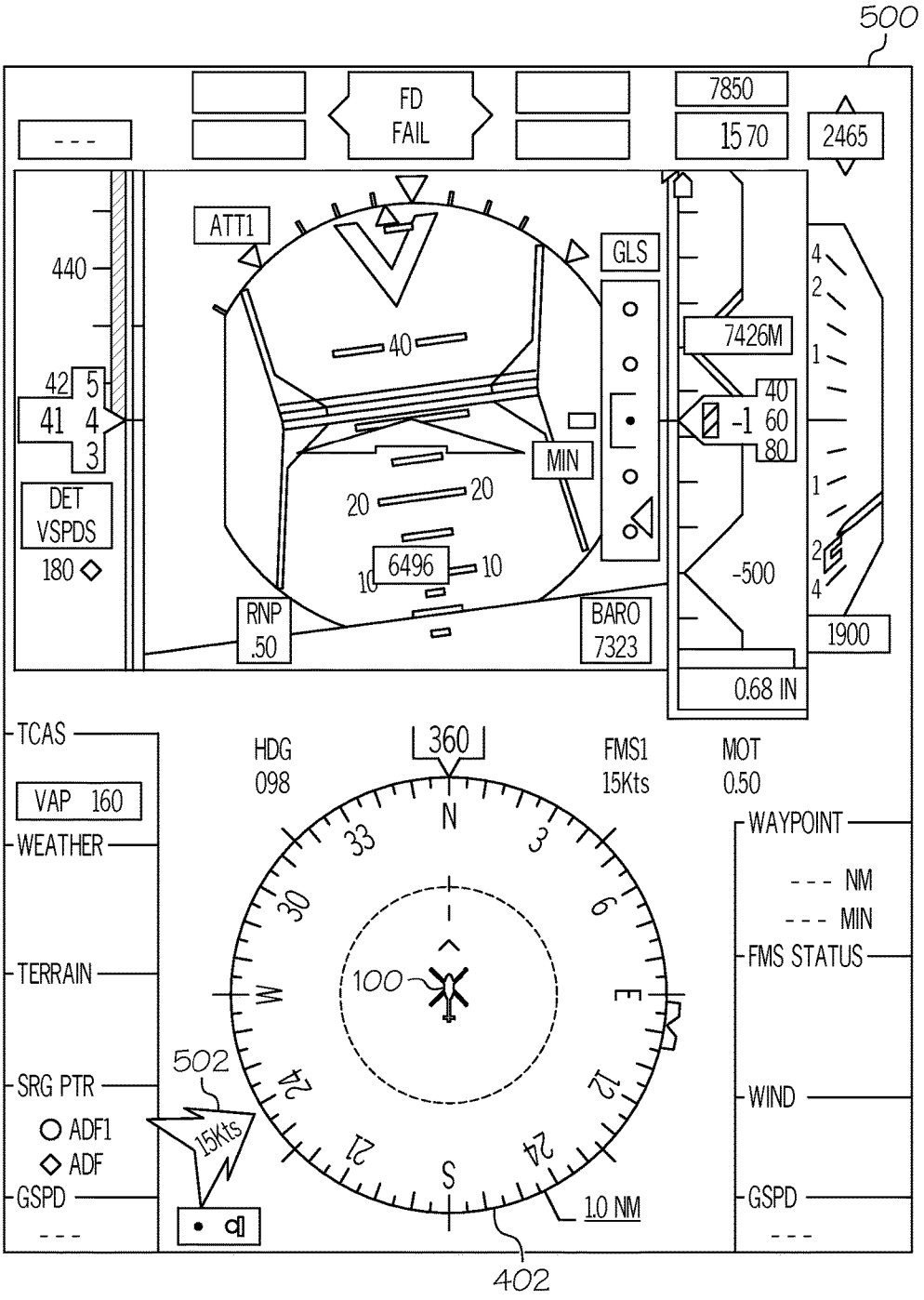
500
FD
FAIL
7850
1570
2465
ATT1
GLS
440
40
7426M
42
5
41
4
3
40
60
80
-1
MIN
DET
VSPDS
180
20
20
6496
10
10
-500
RNP
.50
BARO
7323
1900
0.68 IN
TCAS
VAP 160
WEATHER
TERRAIN
SRG PTR
ADF1
ADF
GSPD
HDG
098
360
FMS1
15Kts
MOT
0.50
N
33
3
30
6
W
E
24
12
21
24
S
100
502
15Kts
1.0 NM
402
WAYPOINT
NM
MIN
FMS STATUS
WIND
GSPD

FIG. 5

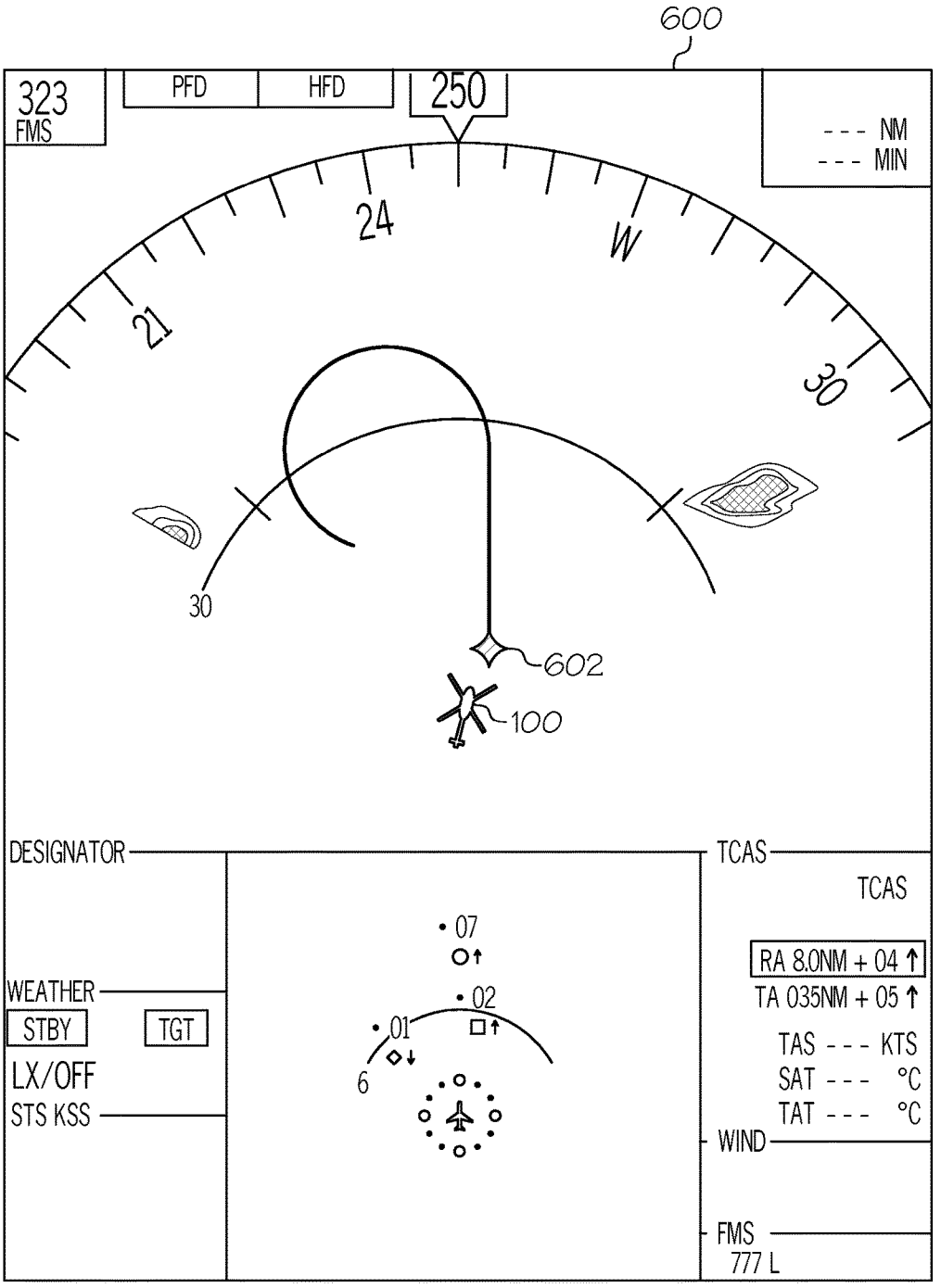
600
323
FMS
PFD
HFD
250
--- NM
--- MIN
24
W
21
30
30
602
100
DESIGNATOR
WEATHER
STBY
TGT
LX/OFF
STS KSS
07
02
01
6
TCAS
TCAS
RA 8.0NM + 04 ↑
TA 035NM + 05 ↑
TAS --- KTS
SAT --- °C
TAT --- °C
WIND
FMS
777 L

FIG. 6

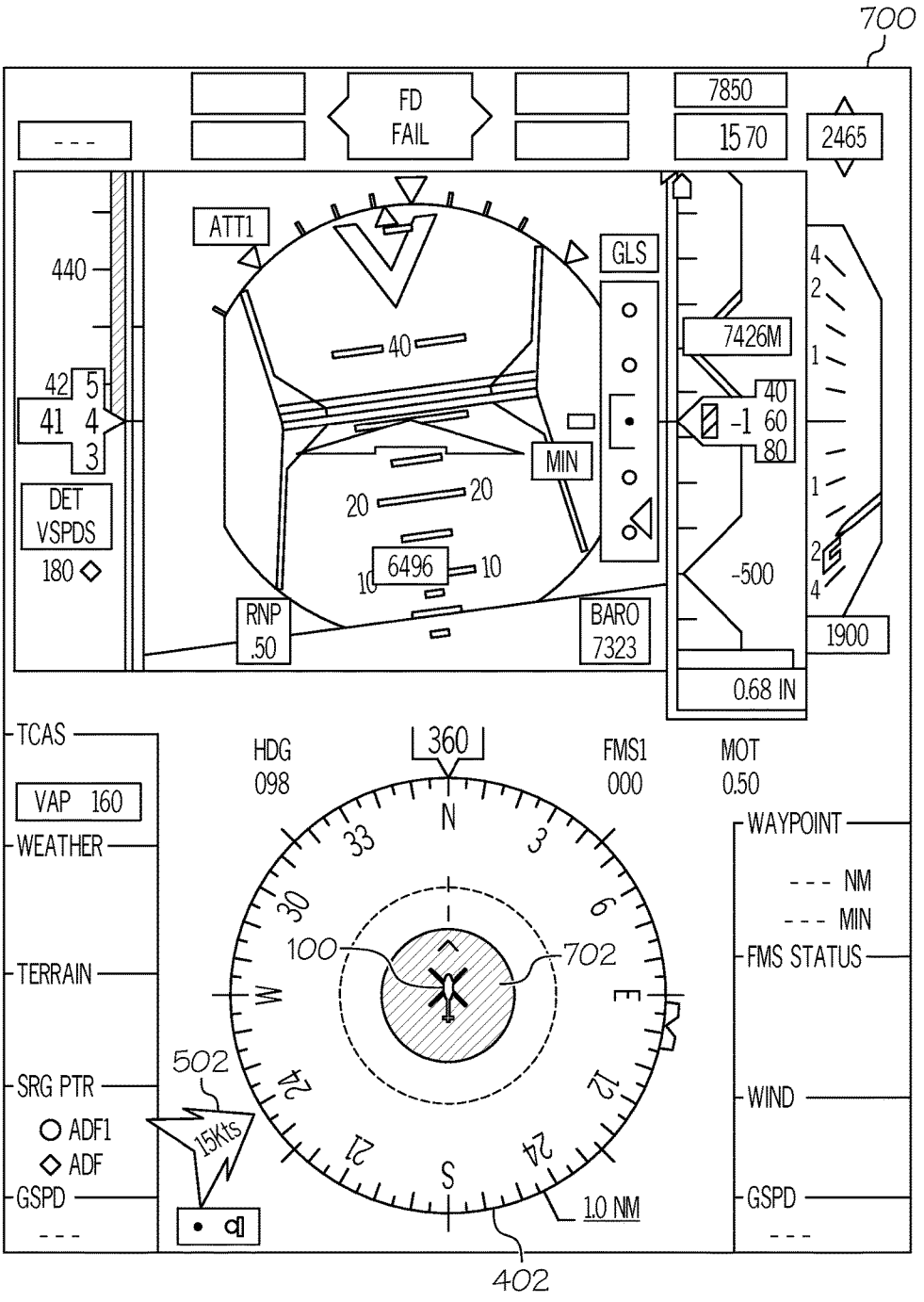
700
FD
FAIL
7850
1570
2465
ATT1
GLS
440
42
41
5
4
3
DET
VSPDS
180
40
20
20
10
6496
10
MIN
7426M
40
-1
60
80
-500
RNP
.50
BARO
7323
1900
0.68 IN
TCAS
VAP 160
WEATHER
TERRAIN
SRG PTR
ADF1
ADF
GSPD
HDG
098
360
FMS1
000
MOT
0.50
WAYPOINT
NM
MIN
FMS STATUS
WIND
GSPD
N
E
S
W
100
702
502
15KTS
1.0 NM
402

FIG. 7

METHOD AND SYSTEM FOR IMPROVING SITUATIONAL AWARENESS OF UNANTICIPATED YAW ON A ROTORCRAFT SYSTEM

TECHNICAL FIELD

[0001] Embodiments of the subject matter described herein relate generally to rotorcraft display systems and, more particularly, to alerting a pilot to a potential unanticipated yaw.

BACKGROUND

[0002] Unanticipated yaw (referred to herein as loss of tail rotor effectiveness (LTE)) causes a rotorcraft to twist around a vertical axis and requires a deft and vigilant response on the part of the rotorcraft pilot in order to safely recover. A rotorcraft is more susceptible to LTE when the pilot is operating in low airspeed and there is either a left crosswind (for rotorcraft with blades that rotate counter clockwise) or a tailwind. Right hand turns are more susceptible to LTE than left hand turns (again, for rotorcraft with blades that rotate counter clockwise). Therefore, during the course of rotorcraft operations, maintaining acute awareness of wind direction and wind velocity is essential.

[0003] During the course of rotorcraft operations, pilots are required to make accurate and fast interpretations of the information presented by all components of the rotorcraft display system. Specifically, the rotorcraft pilot is heavily dependent upon information presented on the cockpit display, which typically comprises a primary flight display (PFD) and a multi-function display (MFD). The PFD and MFD visually convey information (e.g., flight path information, Navigational Aids (NAVAID), airspace information, terrain information, weather information, performance information, traffic information, and the like) obtained from various databases, sensors and transponders.

[0004] Accordingly, alerting a pilot to a potential unanticipated LTE with simple intuitive symbology on the cockpit display is desirable. The desired method and system evaluates rotorcraft airspeed, wind velocity, wind direction, and rotorcraft height above ground to predict several scenarios for LTE zones. The desired method and system overlays or superimposes simple intuitive symbology on the existing PFD and/or MFD to alert a pilot to a potential LTE. The desired method and system decreases pilot cognitive workload, and thus increases pilot situational awareness.

BRIEF SUMMARY

[0005] This summary is provided to introduce a selection of concepts in a simplified form that are further described below in the detailed description section. This summary is not intended to identify key features or essential features of the claimed subject matter, nor is it intended to be used as an aid in determining the scope of the claimed subject matter.

[0006] A method for alerting a pilot to a potential loss of tail rotor effectiveness (LTE) on a rotorcraft having a tail rotor is provided. The method comprises: processing data from (i) an air data computer (ADC), (ii) a performance database, and (iii) a weather source, to determine whether the rotorcraft is within a LTE zone; and when it is determined that the rotorcraft is within the LTE zone, determining, with respect to the rotorcraft, a wind velocity in the LTE zone and a wind direction in the LTE zone; and overlaying, on a cockpit display, a visually distinguishable symbol indicative of the wind velocity in the LTE zone and the wind direction in the LTE zone.

[0007] Another method for alerting a pilot of a rotorcraft having a tail rotor to a potential loss of tail rotor effectiveness (LTE) is provided. The method comprises: processing data from an air data computer (ADC) and from a performance database to determine whether a forward airspeed of the rotorcraft is at or below a predetermined minimum forward airspeed threshold; processing data from a weather source to determine wind velocity and wind direction; determining that the rotorcraft is within a LTE zone when the forward airspeed of the rotorcraft is at or below the predetermined minimum forward airspeed threshold and either (i) the wind direction is from about 210 degrees to about 330 degrees with respect to the rotorcraft and the tail rotor is moving air in the same direction as the wind direction, or (ii) the wind direction is from about 285 degrees to about 315 degrees and the wind velocity is from about 10 Knots to about 30 Knots; and when it is determined that the rotorcraft is within a LTE zone, overlaying, on a primary flight display, a visually distinguishable symbol indicative of the wind velocity in the LTE zone and the wind direction in the LTE zone.

[0008] Also provided is a system for alerting a pilot of a rotorcraft having a tail rotor to a potential loss of tail rotor effectiveness (LTE). The system comprises: an air data computer (ADC) for providing rotorcraft airspeed and rotorcraft altitude; a performance database for providing rotorcraft data; a source of weather data for providing temperature and wind conditions; a display system comprising a cockpit display; and a processor coupled to the ADC, performance database, source of weather data, and the display system, the processor configured to: determine whether the rotorcraft is within a LTE zone based on the rotorcraft airspeed and the wind conditions, and when it is determined that the rotorcraft is within a LTE zone, (i) determine, with respect to the rotorcraft, a wind velocity in the LTE zone and a wind direction at the LTE zone, and (ii) command the display system to overlay, on the cockpit display, a visually distinguishable symbol indicative of the wind velocity in the LTE zone and the wind direction in the LTE zone.

[0009] Other desirable features will become apparent from the following detailed description and the appended claims, taken in conjunction with the accompanying drawings and this background.

BRIEF DESCRIPTION OF THE DRAWINGS

[0010] A more complete understanding of the subject matter may be derived from the following detailed description taken in conjunction with the accompanying drawings, wherein, like reference numerals denote like elements, and:

[0011] FIG. **1** illustrates a first scenario for when a rotorcraft may experience LTE;

[0012] FIG. **2** illustrates a second scenario for when a rotorcraft may experience LTE;

[0013] FIG. **3** is a simplified block diagram of system for alerting a pilot to a potential loss of tail rotor effectiveness, according to the embodiment;

[0014] FIG. **4** is a simplified illustration of a primary flight display (PFD) with an alert for potential LTE, in accordance with a first option of the embodiment;

[0015] FIG. **5** is a simplified illustration of a primary flight display (PFD) with an alert for potential LTE, in accordance with a second option of the embodiment;

[0016] FIG. **6** is a simplified illustration of a multi-function display (MFD) with an alert that a waypoint is in a potential LTE zone, in accordance with the embodiment; and

[0017] FIG. **7** is a simplified illustration of a primary flight display (PFD) **700** with an alert for an LTE zone in addition to an in ground effect (IGE), in accordance with the embodiment.

DETAILED DESCRIPTION

[0018] The following Detailed Description is merely exemplary in nature and is not intended to limit the embodiments of the subject matter or the application and uses of such embodiments. As used herein, the word "exemplary" means "serving as an example, instance, or illustration." Any implementation described herein as exemplary is not necessarily to be construed as preferred or advantageous over any other implementations. Furthermore, there is no intention to be bound by any expressed or implied theory presented in the preceding Technical Field, Background, Brief Summary or the following Detailed Description.

[0019] Techniques and technologies may be described herein in terms of functional and/or logical block components and with reference to symbolic representations of operations, processing tasks, and functions that may be performed by various computing components or devices. Such operations, tasks, and functions are sometimes referred to as being computer-executed, computerized, software-implemented, or computer-implemented. In practice, one or more processor devices can carry out the described operations, tasks, and functions by manipulating electrical signals representing data bits at memory locations in the system memory, as well as other processing of signals. The memory locations where data bits are maintained are physical locations that have particular electrical, magnetic, optical, or organic properties corresponding to the data bits. It should be appreciated that the various block components shown in the figures may be realized by any number of hardware, software, and/or firmware components configured to perform the specified functions. For example, an embodiment of a system or a component may employ various integrated circuit components, e.g., memory elements, digital signal processing elements, logic elements, look-up tables, or the like, which may carry out a variety of functions under the control of one or more microprocessors or other control devices.

[0020] The following descriptions may refer to elements or nodes or features being "coupled" together. As used herein, unless expressly stated otherwise, "coupled" means that one element/node/feature is directly or indirectly joined to (or directly or indirectly communicates with) another element/node/feature, and not necessarily mechanically. Thus, although the drawings may depict one exemplary arrangement of elements, additional intervening elements, devices, features, or components may be present in an embodiment of the depicted subject matter. In addition, certain terminology may also be used in the following description for the purpose of reference only, and thus are not intended to be limiting.

[0021] FIG. **1** illustrates a first scenario when a rotorcraft may experience LTE. Rotorcraft **100** is centered within rotorcraft main rotor blade span **102**. The circle representing the main rotor blade span **102** is demarked with degrees from zero degrees to 360 degrees. Wind velocity varies radially along the main rotor blade span **102**, and FIG. **1** shows main rotor blade span **102** having wind velocity of 10 Knots (**108**), 15 Knots (**106**) and 30 Knots (**104**). A left "crosswind" or wind direction, with respect to the rotorcraft **100**, between 285 degrees and 315 degrees is denoted as angle **110**. When the wind direction is within angle **110** of the rotorcraft **100**, two vortexes are created from the main rotor blade span **102**. A first vortex **112** is shown engulfing the rotorcraft tail rotor **105**, and a second vortex **114** is shown toward the front of the rotorcraft **100**.

[0022] A first LTE zone may be described as meeting the following conditions: rotorcraft **100** has a forward speed at or below a predetermined minimum forward airspeed threshold, the cross wind direction is within angle **110** of the rotorcraft **100**, and the rotorcraft tail rotor **105** is directing wind in the same direction as the cross wind. Another LTE zone may be defined more broadly, as when a left cross wind direction is within about 210 degrees to about 330 degrees from the rotorcraft **100** and rotorcraft **100** has a forward speed at or below a predetermined minimum forward airspeed threshold (A person with skill in the art will readily appreciate that rotorcraft having counter-clockwise blade rotation will be susceptible to winds coming from the right, and the same analysis will apply). In an embodiment, the predetermined minimum forward airspeed threshold for option one and option two is 30 Knots.

[0023] FIG. **2** illustrates a second scenario for when a rotorcraft may experience LTE. In FIG. **2**, the wind velocity from the rotorcraft main rotor blade span **102** is 5 Knots (**208**), 10 Knots (**206**), and 15 Knots (**204**). On occurrence of a "tailwind" or wind direction from about 120 degrees to about 240 degrees with respect to the rotorcraft **100** the rotorcraft **100** is in yet another LTE zone. In this scenario, rotorcraft **100** may weathervane into the wind direction if left unchecked.

[0024] FIG. **3** is a simplified block diagram of a system for alerting a pilot to a potential loss of tail rotor effectiveness **300**, according to the embodiment. Air data computer (ADC) **310**, Performance database and sensors **312**, and weather sources **314** are coupled to processor **305**. The processor **305** may reside within or be coupled to flight management system FMS **308**, and it commands the display system **316** to generate and update cockpit display **318**.

[0025] Processor **305** comprises a weather model module **302**, ground speed module **304**, vortex logic module **306**, and memory **320**. In practice, processor **305** may comprise, or be associated with, any suitable number of individual microprocessors, flight control computers, navigational equipment, memories (such as memory **320**), power supplies, storage devices, interface cards, and other standard components known in the art. In this respect, the processor **305** may include or cooperate with any number of software models, software programs (e.g., rotorcraft display programs) or instructions designed to carry out the various methods, process tasks, calculations, and control/display functions described below. As mentioned, processor **305** may be included within a Flight Management System (FMS) **308** as shown in FIG. **3**, or may reside separately. The FMS **308** may provide the processor **305** with wind models and predicted ground speed for each waypoint of a plurality of waypoints along a navigation route for a rotorcraft, and the

processor **305** may, in response, predict a wind velocity and wind direction for each waypoint of the plurality of waypoints.

[0026] Image-generating devices suitable for use as cockpit display **318** typically take the form of a primary flight display (PFD) and a multi-function display (MFD), and include various analog (e.g., cathode ray tube) and digital (e.g., liquid crystal, active matrix, plasma, etc.) display devices. In certain embodiments, cockpit display **318** may assume the form of a Head-Down Display (HDD) or a Head-Up Display (HUD) included within a rotorcraft's Electronic Flight Instrument System (EFIS).

[0027] During operation of the system for alerting a pilot to a potential loss of tail rotor effectiveness **300**, the ADC **310**, Performance database and sensors **312**, weather sources **314**, and FMS **308** continually provide processor **305** with navigational data pertaining to terrain, weather (including wind direction and wind velocity), rotorcraft altitude, rotorcraft status, and the like. In response to this combination of input data, processor **305** commands the display system **316** to produce 2D and 3D graphical displays on the PFD and MFD of the cockpit display **318** that visually provide a composite of navigation information pertaining to the host aircraft, weather, navigational route information, elevation, terrain, and potential LTE. Processor **305** may provide the cockpit display **318** with a composite image in a two dimensional format (e.g., as a moving map display), or a three dimensional format (e.g., as a perspective display), or in a hybrid format (e.g., in a picture-in-picture or split screen arrangement). Processor **305** may command an aural warning device **322**, such as a speaker, to emit an aural warning when it is determined that there is a potential loss of tail rotor effectiveness.

[0028] As is illustrated in FIGS. **4**, **5**, **6**, and **7**, when processor **305** determines that the rotorcraft is within a potential LTE zone and/or experiencing in ground effect (referred to herein as IGE and described in connection with FIG. **7**), the processor **305** commands the display system **316** to superimpose or overlay visually distinguishable symbology on symbols traditionally displayed on the existing cockpit display **318** to alert the pilot. As mentioned, processor **305** may also command an aural warning device **322**, such as a speaker, to emit an aural warning. The visually distinguishable symbology prompts the pilot to begin correction by providing a simple, intuitive visual notification to the pilot. Various methods or techniques may be used to render visually distinguishable symbology, such as, but not limited to, depicting symbols using: highlighting, color, flashing, and dotted or broken lines.

[0029] FIG. **4** is a simplified illustration of a primary flight display (PFD) **400** with an alert for potential LTE, in accordance with a first option of the embodiment. Traditionally, a symbol for the rotorcraft **100** is shown in a compass header symbol **402** on the PFD **400** to show the heading direction of the rotorcraft **100**. In the exemplary embodiment, the processor **305** has determined that rotorcraft **100** is in a LTE zone. Responsive to determining that the rotorcraft **100** is in a LTE zone, a visually distinguishable symbol, in the form of a circle **406**, is superimposed or overlaid on the PFD **400** such that circle **406** is within compass header symbol **402**, and surrounds the rotorcraft **100**. In addition, a visually distinguishable arrow **408** is superimposed or overlaid on PFD **400**, and oriented to point at a location on circle **406** that indicates the determined "cross wind" wind direction with respect to rotorcraft **100**. The magnitude of the wind velocity at the LTE zone is displayed at **410**. The visually distinguishable arrow **408** may be removed from the PFD **400** when the following conditions are true: the forward speed of the rotorcraft **100** is no longer at or below a predetermined minimum forward airspeed threshold and the processor determines that the rotorcraft **100** is not in a LTE zone.

[0030] FIG. **5** is a simplified illustration of a primary flight display (PFD) **500** with an alert for potential LTE, in accordance with a second option of the embodiment. As with FIG. **4**, a symbol for the rotorcraft **100** is shown in a compass header symbol **402** traditionally rendered on the PFD **500** to show the heading direction of the rotorcraft **100**. In the exemplary embodiment, the processor **305** has determined that the rotorcraft **100** is in a LTE zone. Responsive to determining that the rotorcraft **100** is in a LTE zone, a visually distinguishable symbol **502** is superimposed or overlaid on PFD **500**, and oriented to point at compass header symbol **402** at a location on compass header symbol **402** that indicates the determined "cross wind" wind direction. Wind velocity at the LTE zone is displayed within the symbol **502**. The magnitude of the wind velocity at the LTE zone is displayed within symbol **502**. In the embodiment, symbol **502** has the shape of a jagged arrow; however, other visually intuitive shapes are contemplated.

[0031] FIG. **6** is a simplified illustration of a multi-function display (MFD) with an alert that a waypoint is in a potential LTE zone, in accordance with the embodiment. As previously mentioned, the FMS may provide wind models and predicted ground speed for each waypoint of a plurality of waypoints along a navigation route, and, in response, the processor **305** predicts a wind velocity and wind direction for each waypoint of the plurality of waypoints. In the embodiment shown in FIG. **6**, the processor **305** has further determined that waypoint **602**, along a projected flight course for rotorcraft **100**, is in a LTE zone. Responsive to determining that waypoint **602** is in a LTE zone, waypoint **602** is visually altered by overlaying waypoint **602** with a visually distinguishable symbol having a similar waypoint shape. In the embodiment, symbol used for waypoint **602** has a similar waypoint shape as traditional waypoint symbols; however, other visually intuitive colors and shapes are contemplated.

[0032] FIG. **7** is a simplified illustration of a primary flight display (PFD) **700** with an alert for an LTE zone in addition to an alert for "in ground effect" (IGE), in accordance with the embodiment. IGE is a phenomenon that influences rotorcraft performance that occurs while the rotorcraft is flying at a forward speed at or below a predetermined minimum forward airspeed threshold, and close to the ground (herein, "close to the ground" is defined as at or below a predetermined minimum height above ground). In the course of rotorcraft operations, the rotorcraft may go in and out of experiencing IGE, in addition to flying into a LTE zone. In the exemplary embodiment, processor **305** determines whether the rotorcraft **100** is experiencing IGE and initiates a visual alert when it is determined that the rotorcraft is experiencing IGE. When it is determined that the rotorcraft is not experiencing IGE, a displayed IGE symbol is removed from the cockpit display **318**. In this manner, a pilot is alerted to a rotorcraft going in and out of experiencing IGE.

[0033] The embodiment supports alerting the rotorcraft pilot of the LTE according to either option one (FIG. **4**) or option two (FIG. **5**), and then further alerting the pilot to IGE. In FIG. **7**, symbol **502** alerts the pilot to the LTE zone, showing a corresponding 15 Knots of wind velocity. To additionally alert the pilot to IGE, a visually distinguishable, translucent, symbol **702** is superimposed over the rotorcraft **100** symbol within the compass header symbol **402**. In FIG. **7**, symbol **702** is a circle with a slightly shaded center; however variations in symbol **702** are contemplated.

[0034] Thus, there has been provided a method and system for alerting a pilot to a potential unanticipated LTE with simple intuitive symbology on the cockpit display. The provided method and system evaluates rotorcraft airspeed, wind velocity, wind direction, and rotorcraft height above ground to predict several scenarios for LTE zones. The desired method and system overlays or superimposes simple intuitive symbology on the existing PFD and/or MFD to alert a pilot to a potential LTE. The provided method and system decreases pilot cognitive workload, and thus increases pilot situational awareness.

[0035] While at least one exemplary embodiment has been presented in the foregoing detailed description, it should be appreciated that a vast number of variations exist. It should also be appreciated that the exemplary embodiment or embodiments described herein are not intended to limit the scope, applicability, or configuration of the claimed subject matter in any way. Rather, the foregoing detailed description will provide those skilled in the art with a convenient road map for implementing the described embodiment or embodiments. It should be understood that various changes can be made in the function and arrangement of elements without departing from the scope defined by the claims, which includes known equivalents and foreseeable equivalents at the time of filing this patent application.

What is claimed is:

1. A method for alerting a pilot to a potential loss of tail rotor effectiveness (LTE) on a rotorcraft having a tail rotor, the method comprising:

processing data from (i) an air data computer (ADC), (ii) a performance database, and (iii) a weather source, to determine whether the rotorcraft is within a LTE zone; and

when it is determined that the rotorcraft is within the LTE zone,

determining, with respect to the rotorcraft, a wind velocity in the LTE zone and a wind direction in the LTE zone; and

overlaying, on a cockpit display, a visually distinguishable symbol indicative of the wind velocity in the LTE zone and the wind direction in the LTE zone.

2. The method of claim **1**, wherein the step of processing data to determine whether the rotorcraft is within a LTE zone comprises determining whether a forward rotorcraft airspeed is at or below a predetermined minimum forward airspeed threshold.

3. The method of claim **2**, wherein the predetermined minimum forward airspeed threshold is substantially 30 Knots.

4. The method of claim **2**, the step of processing data to determine whether the rotorcraft is within a LTE zone further comprises determining whether the wind direction is coming toward the rotorcraft from about 120 degrees to about 330 degrees with respect to the rotorcraft.

5. The method of claim **4**, wherein the step of processing data to determine whether the rotorcraft is within a LTE zone further comprises determining whether the tail rotor is moving air in the same direction as the wind direction when the wind direction is from about 210 degrees to about 330 degrees.

6. The method of claim **4**, wherein the step of processing data to determine whether the rotorcraft is within a LTE zone further comprises determining whether wind velocity is from about ten knots to about 30 knots and the wind direction is from about 285 degrees to about 315 degrees with respect to the rotorcraft.

7. The method of claim **4**, wherein the step of overlaying a visually distinguishable symbol comprises superimposing, on a compass header symbol, a symbol that is indicative of the wind velocity and the wind direction in the LTE zone.

8. The method of claim **3**, wherein the step of overlaying a visually distinguishable symbol comprises superimposing, on a compass header symbol, a symbol that is indicative of the wind velocity and the wind direction in the LTE zone.

9. The method of claim **4**, further comprising:

determining whether a waypoint is within the LTE zone; and

visually altering, on the cockpit display, a symbol indicative of the waypoint when it is determined that the waypoint is in the LTE zone.

10. The method of claim **9**, further comprising:

determining whether the rotorcraft is experiencing in ground effect (IGE); and

superimposing on a compass header symbol, a visually distinguishable symbol indicative of IGE when it is determined that the rotorcraft is experiencing IGE.

11. The method of claim **10**, wherein determining whether the rotorcraft is experiencing IGE comprises determining whether the rotorcraft is flying at or below a predetermined minimum height above ground.

12. A method for alerting a pilot of a rotorcraft having a tail rotor to a potential loss of tail rotor effectiveness (LTE), the method comprising:

processing data from an air data computer (ADC) and from a performance database to determine whether a forward airspeed of the rotorcraft is at or below a predetermined minimum forward airspeed threshold;

processing data from a weather source to determine wind velocity and wind direction;

determining that the rotorcraft is within a LTE zone when the forward airspeed of the rotorcraft is at or below the predetermined minimum forward airspeed threshold and either (i) the wind direction is from about 210 degrees to about 330 degrees with respect to the rotorcraft and the tail rotor is moving air in the same direction as the wind direction, or (ii) the wind direction is from about 285 degrees to about 315 degrees and the wind velocity is from about 10 Knots to about 30 Knots; and

when it is determined that the rotorcraft is within a LTE zone, overlaying, on a primary flight display, a visually distinguishable symbol indicative of the wind velocity in the LTE zone and the wind direction in the LTE zone.

13. The method of claim **12**, wherein the step of determining that the rotorcraft is within a LTE zone further comprises determining that the rotorcraft is turning right.

14. The method of claim **12**, further comprising:

determining whether a waypoint is within the LTE zone; and

visually altering, on the cockpit display, a symbol indicative of the waypoint when it is determined that the waypoint is in the LTE zone.

15. The method of claim **12**, further comprising:

determining that the rotorcraft is experiencing in ground effect (IGE) when the rotorcraft is flying below a predetermined minimum height above ground;

superimposing on a compass header symbol, a visually distinguishable symbol indicative of IGE when it is determined that the rotorcraft is experiencing IGE; and

removing, a visually distinguishable symbol indicative of IGE when it is determined that the rotorcraft is not experiencing IGE.

16. A system for alerting a pilot of a rotorcraft having a tail rotor to a potential loss of tail rotor effectiveness (LTE), the system comprising:

an air data computer (ADC) for providing rotorcraft airspeed and rotorcraft altitude;

a performance database for providing rotorcraft data;

a source of weather data for providing temperature and wind conditions;

a display system comprising a cockpit display; and

a processor coupled to the ADC, performance database, source of weather data, and the display system, the processor configured to:

determine whether the rotorcraft is within a LTE zone based on the rotorcraft airspeed and the wind conditions, and

when it is determined that the rotorcraft is within a LTE zone, (i) determine, with respect to the rotorcraft, a wind velocity in the LTE zone and a wind direction at the LTE zone, and (ii) command the display system to overlay, on the cockpit display, a visually distinguishable symbol indicative of the wind velocity in the LTE zone and the wind direction in the LTE zone.

17. The system of claim **16**, further comprising a flight management system (FMS) coupled to the processor, the FMS providing wind models and predicted ground speed for each waypoint of a plurality of waypoints along a navigation route, and wherein the processor is further configured to (i) predict a wind velocity and wind direction for each waypoint of the plurality of waypoints, (ii) determine whether a waypoint is within a LTE zone, and (iii) command the display system to visually alter, on the cockpit display, a symbol indicative of the waypoint when it is determined that the waypoint is in the LTE zone.

18. The system of claim **17**, wherein the processor is further configured to:

determine when the rotorcraft is experiencing in ground effect (IGE); and

command the display system to (i) superimpose on a cockpit display, a visually distinguishable symbol indicative of IGE when it is determined that the rotorcraft is experiencing IGE and (ii) remove a visually distinguishable symbol indicative of IGE when it is determined that the rotorcraft is not experiencing IGE.

19. The system of claim **18**, wherein the processor is further configured to determine that the rotorcraft is within the LTE zone when a forward rotorcraft airspeed is below a predetermined minimum forward airspeed threshold and (i) the wind direction is from about 210 degrees to about 330 degrees and (ii) the tail rotor is moving air in the same direction as the wind direction.

20. The system of claim **19**, wherein the processor is further configured to determine that the rotorcraft is within the LTE zone when the wind direction is from about 285 degrees to about 315 degrees and the wind velocity is from about 10 Knots to about 30 Knots.

* * * * *